# M-LED

MODULAR LIGHTING — INSTRUMENTS

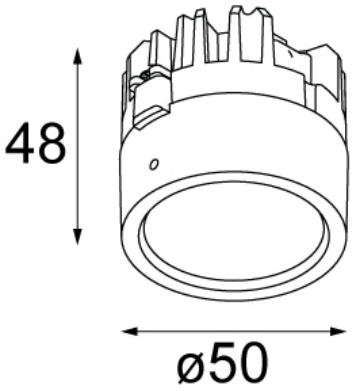


## M-LED 50 GE

With the introduction of the in-house developed M-LED modules, we are preparing some of our icons for the future. The M-LED 111 module is replacing the AR111 lamp and comes in white structure or black matt. M-LED 111 is applicable for following 'AR111' (GE) luminaires: Bolster recessed, Nomad, Multiple, Multiple trimless, Lotis, Haloscan and Thub metal. Also fits AR111 modules of SL149, Multiple(x), Freeway, 2FLAT2C and Traffic. M-LED 70 is replacing the well-known AR70 lamp. The M-LED 70 module is applicable for 'AR70' luminaires such as Mini multiple and Haloscan 128.

**Art. Nr. 14060705**

**SPECIFICATIONS**

| | | |
|---|---|---|
| Lamp | 1x LED Array | |
| Gear / Transfo | LED gear not incl. | |
| Weight | 0.14kg | |
| Min. Distance | | |
| IP | IP20 | |
| Glow Wire Test | | |
| Power supply | 350mA | **500mA** |
| | 17.8Vf | **18.4Vf** |
| Connected load | 6.2W | **9.2W** |
| Lumen | lm | **lm** |
| Efficacy | lm/W | **lm/W** |
| UGR | | |
| Adjustability | Not Applicable | |

| | WARM WHITE 2700K / CRI + | | | WARM WHITE 3000K / CRI + | | | NEUTRAL WHITE 3500K / CRI + | | | NEUTRAL WHITE 4000K / CRI + | | |
|---|---|---|---|---|---|---|---|---|---|---|---|---|
| | SPOT | MEDIUM | FLOOD | SPOT | MEDIUM | FLOOD | SPOT | MEDIUM | FLOOD | SPOT | MEDIUM | FLOOD |
| alu | 14060005 | 14060105 | 14060205 | 14060305 | 14060405 | 14060505 | 14060605 | 14060705 | 14060805 | 14060905 | 14061005 | 14061105 |

Modular reserves the right to alter material, dimensions and characteristics without prior notice. Lighting technology changes rapidly. Latest datasheet and documentation available on www.supermodular.com.

17/01/2017 - ©2017 Modular Lighting Instruments